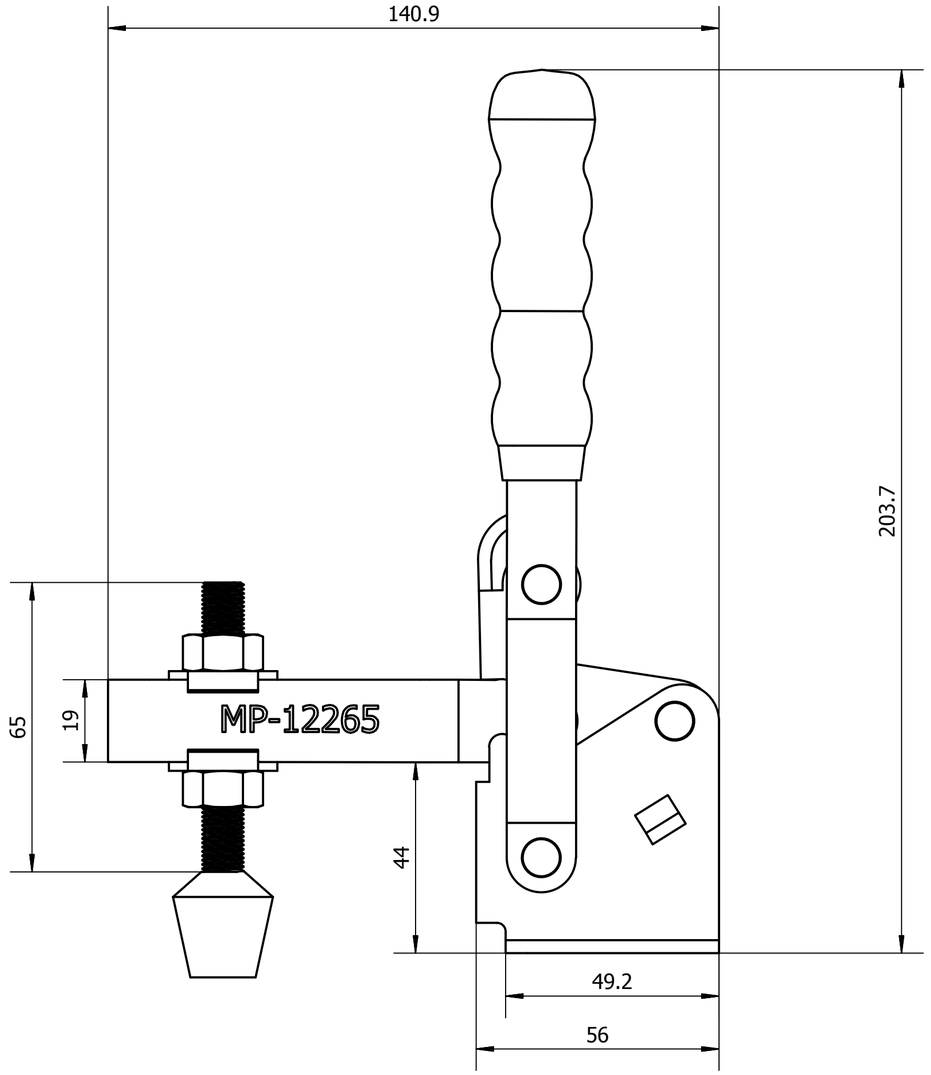
140.9
203.7
65
19
MP-12265
44
49.2
56

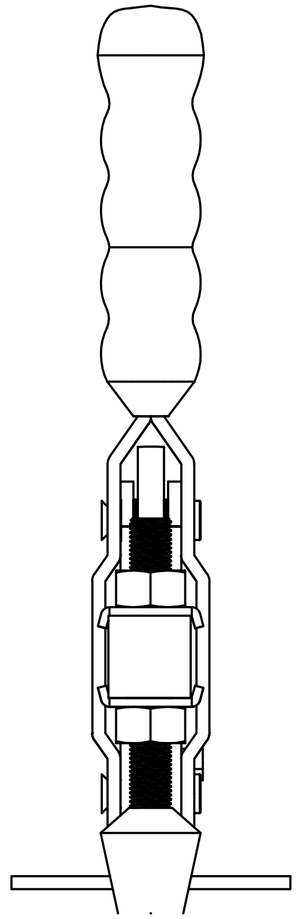

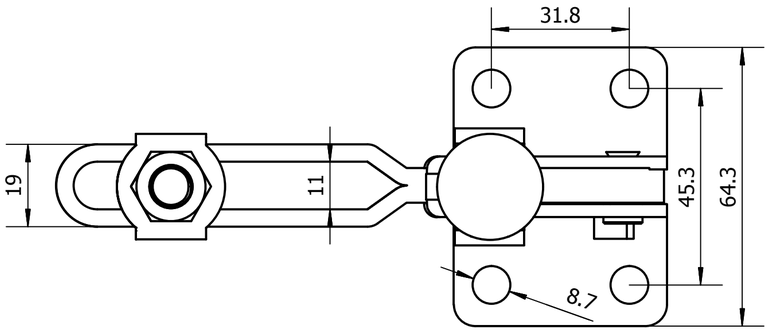
31.8
19
11
45.3
64.3
8.7

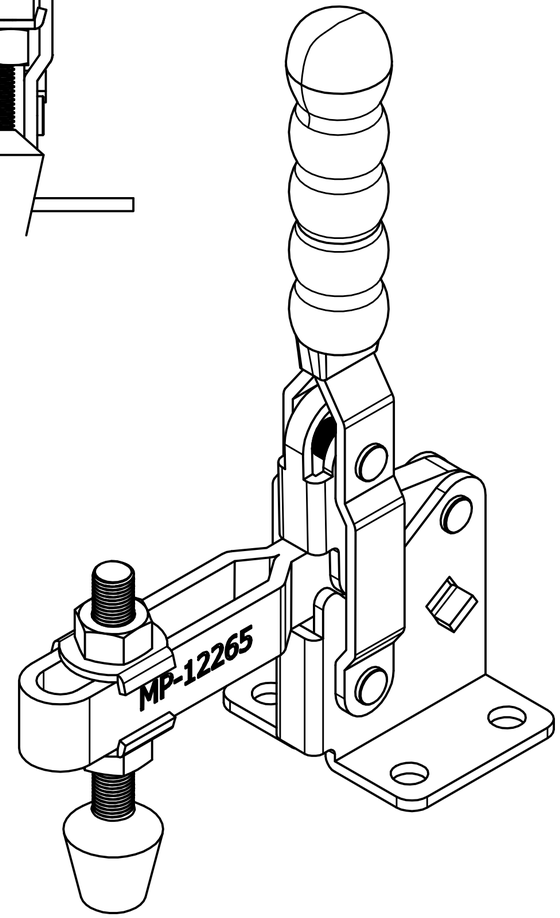
MP-12265