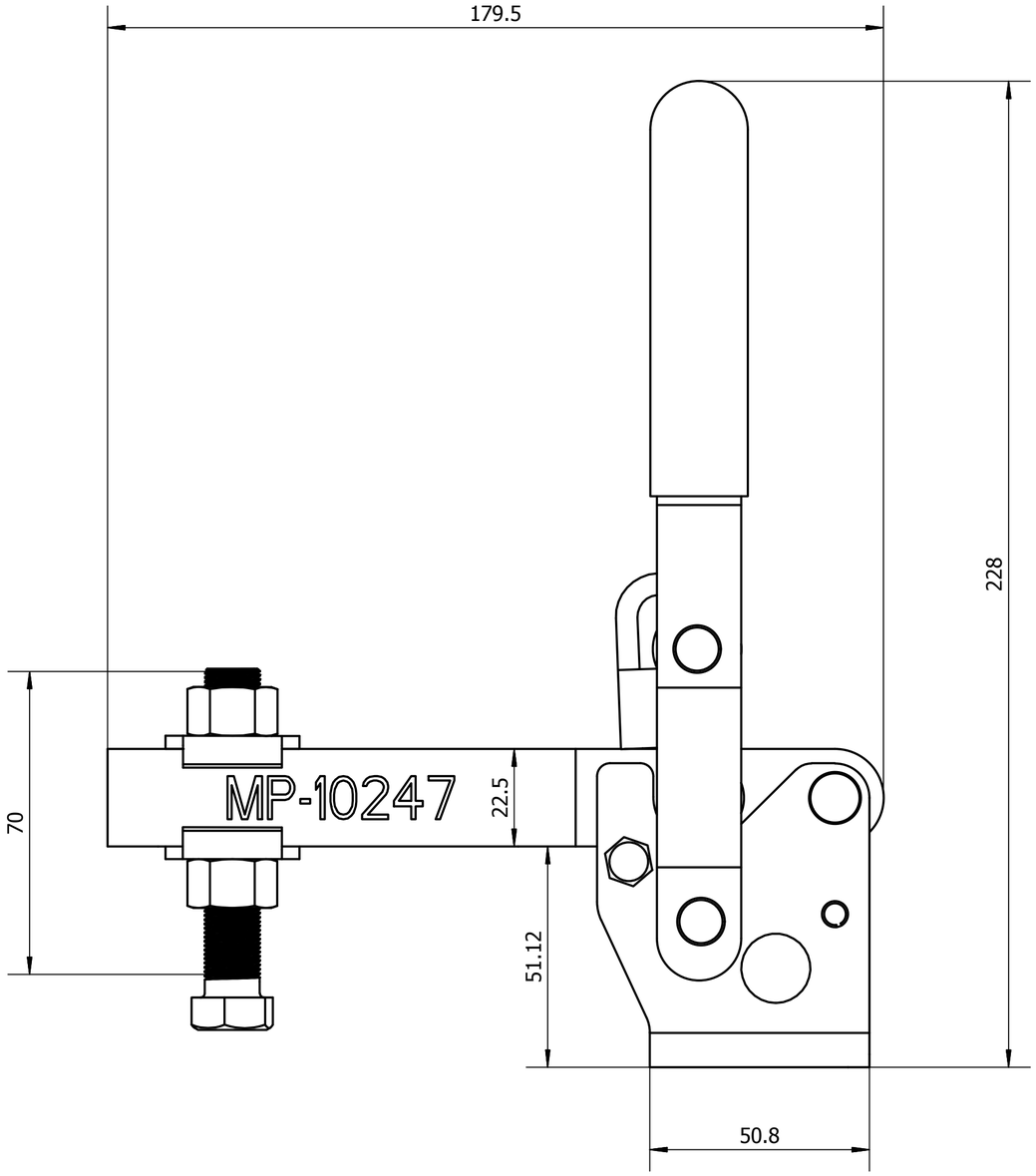
179.5
228
MP-10247
22.5
70
51.12
50.8

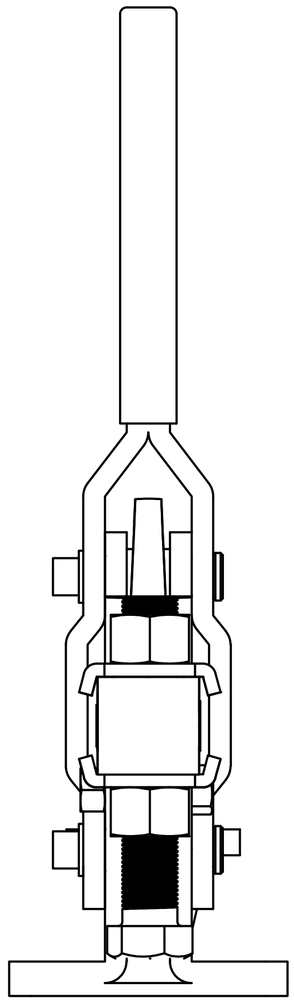

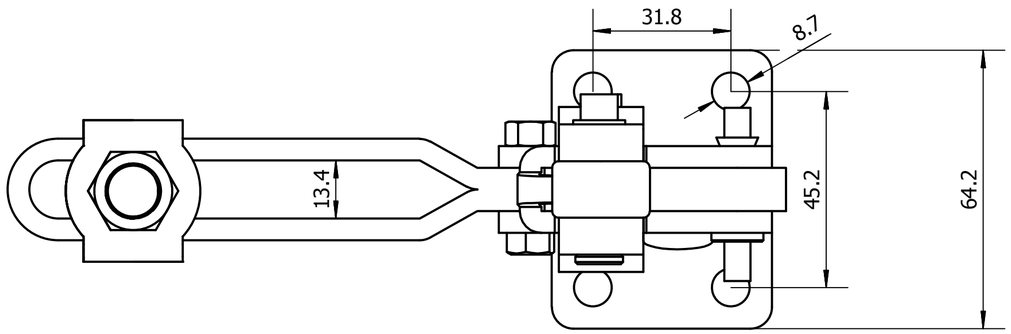
31.8
8.7
13.4
45.2
64.2

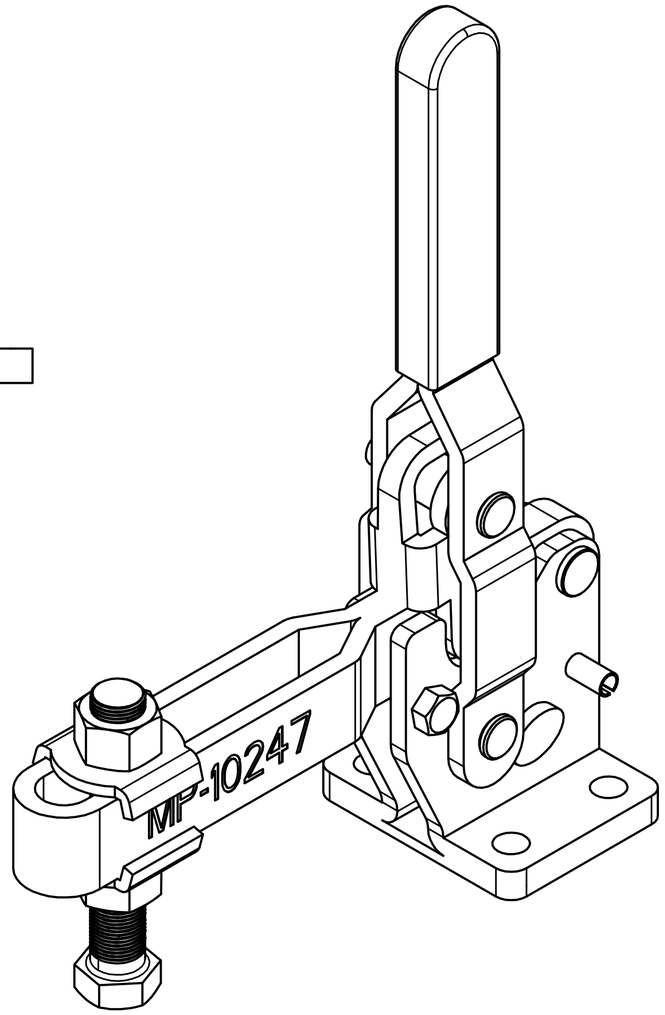
MP-10247