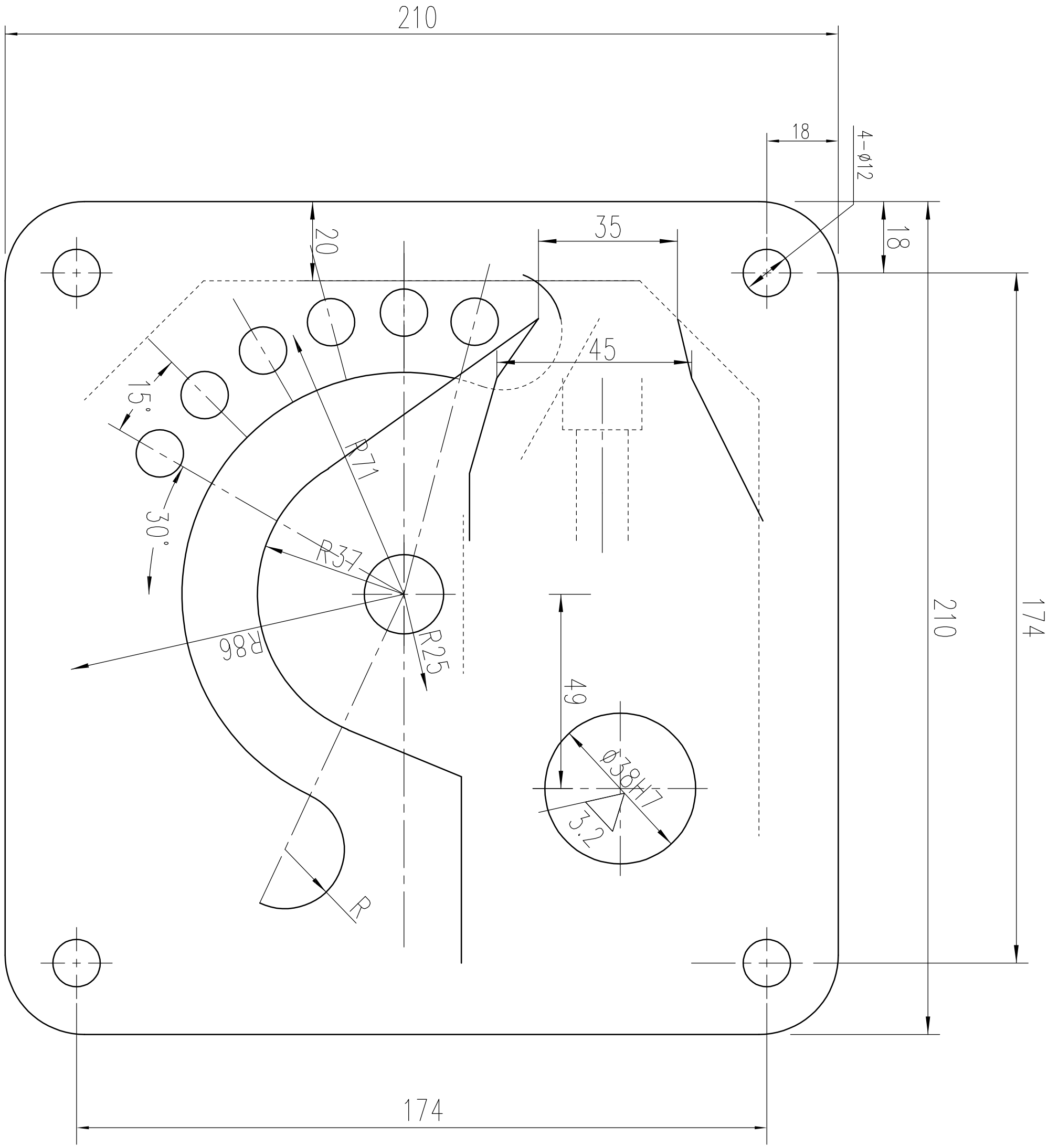UB-100 - Base Dimensions