1 TONNE ENGINE CRANE - BUYER'S GUIDE

DON'T GET CAUGHT SHORT

ALL CRANES ARE NOT EQUAL

Shown lifting a 320kg Engine - 625kg Jib Setting

DON'T GET CAUGHT SHORT or find you must modify your crane to be able to achieve the lift height or reach you need, as this can overload the crane and cause serious injuries. Don't go for cheap over functionality.

** What height clearance do you need to remove your engine safely with-out too much dismantling ?*
** What reach do you need to remove your engine safely with-out too much struggling ?*
** Will your choice of crane be stable enough ?*

HAFCO HC-1T - Hydraulic Engine Crane

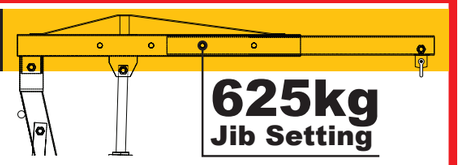

Clear the engine bay without having to dismantle the whole front end

Jib Setting	Max. Lift Height	Max. Reach
310kg	2380mm	1050mm
625kg	2260mm	870mm
930kg	2130mm	690mm
1250kg	2000mm	510mm

CHEAPER MODELS

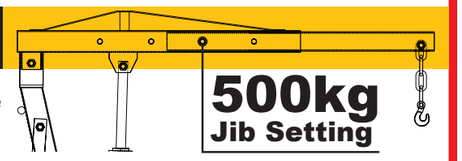

Other cheaper models leave you short on lift height and reach creating more work dismantling vehicle front end to when removing engines

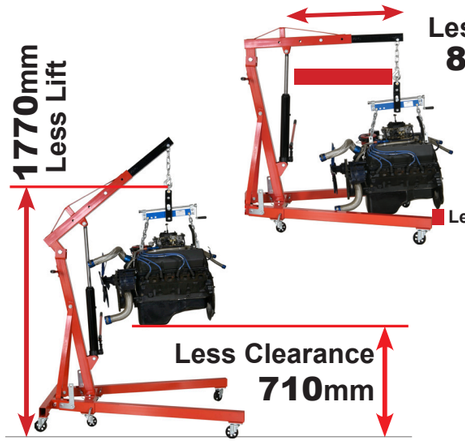

Jib Setting	Max. Lift Height	Max. Reach
250kg	1870mm	960mm
500kg	1770mm	800mm
750kg	1670mm	640mm
1000kg	1570mm	480mm

1 TONNE ENGINE CRANE - BUYER'S GUIDE

DON'T GET CAUGHT SHORT

ALL CRANES ARE NOT EQUAL

CHEAPER MODELS 1T ENGINE CRANE	HAFCO A350 1.25T ENGINE CRANE
1T	1.25T
1 Tonne Max Capacity	1.25 Tonne Max Capacity
Light Weight 72.5kg	Heavy Duty 90kg
Less Stability - Legs are 1430mm	More Stability - Legs are 1830mm
Max Throat 960mm	Max Throat 1050mm
Less Lifting Height 1870mm	More Lifting Height - 2380mm
Smaller Frame 50x70mm x 2.8mm	Bigger Frame 70x70mm x 3.8mm
Slower - Single Action Pump	Faster - Double Action Pump

Bigger Lift, Reach, Frame & Faster Pump

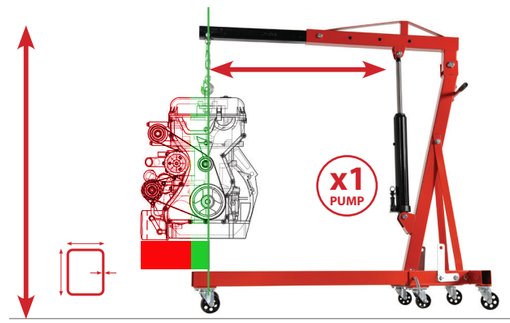

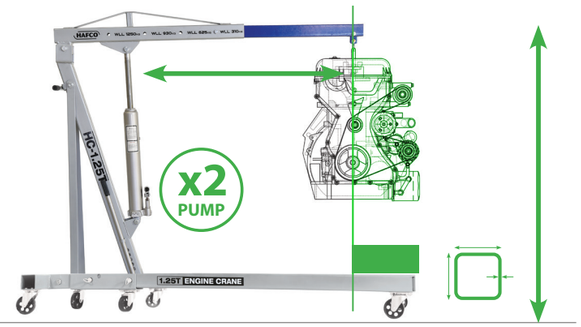

1 TONNE ENGINE CRANE - BUYER'S GUIDE

DON'T GET CAUGHT SHORT

ALL CRANES ARE NOT EQUAL

CHEAPER MODELS	HAFCO A350
Light Weight **72.5kg**	Heavy Weight **90kg**
Small Tube Section **50x70mm x 2.8mm**	Large Tube Section **70x70mm x 3.8mm Wall**
Small Lifting Capacity **1 Tonne**	Large Lifting Capacity **1.25 Tonne**
Smaller Pump Diameter **Ø70mm** Slower Pump Action **Single**	Large Pump Diameter **Ø75mm** Faster Pump Action **Double**

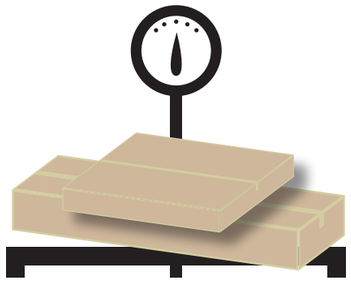

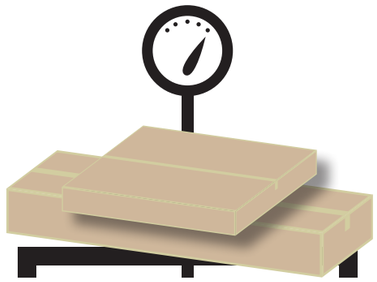

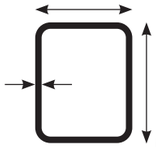

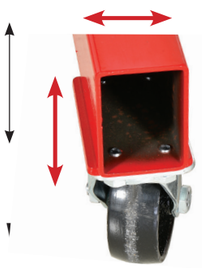

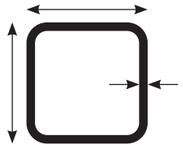

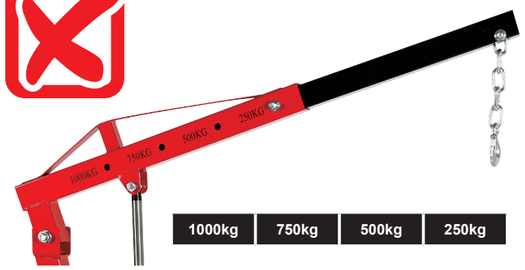

1000kg	750kg	500kg	250kg

1250kg	930kg	625kg	310kg

1 TONNE ENGINE CRANE - BUYER'S GUIDE

DON'T GET CAUGHT SHORT

ALL CRANES ARE NOT EQUAL

CHEAPER MODELS	HAFCO A350
Less Lifting Height **1870mm**	More Lifting Height **2380mm**
Less Reach **960mm**	More Reach **1050mm**
Less Stability **50mm**	More Stabilty **290mm**
Less Clearance **710mm**	More Clearance **1200mm**

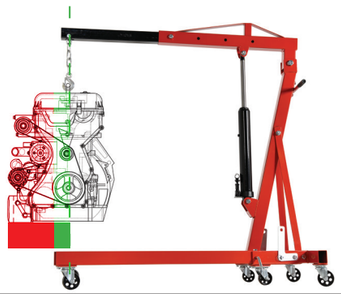

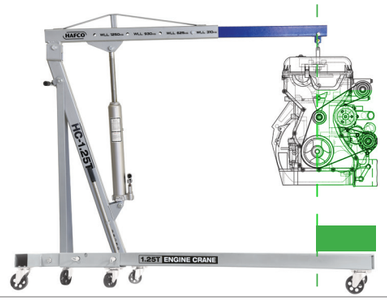

Clearance based on a V8 Engine @ 625kg Jib Setting